

User Manual

MaxiCharger AC Compact (EU)

Trademarks

Autel® and MaxiCharger® are trademarks of Autel Intelligent Technology Corp., Ltd., registered in China, the United States and other countries. All other marks are trademarks or registered trademarks of their respective holders.

Copyright Information

No part of this manual may be reproduced, stored in a retrieval system or transmitted, in any form or by any means, electronic, mechanical, photocopying, recording, or otherwise without the prior written permission of Autel.

Disclaimer of Warranties and Limitation of Liabilities

All information, specifications and illustrations in this manual are based on the latest information available at the time of printing.

Autel reserves the right to make changes at any time without notice. While information of this manual has been carefully checked for accuracy, no guarantee is given for the completeness and correctness of the contents, including but not limited to the product specifications, functions, and illustrations.

Autel will not be liable for any direct, special, incidental, indirect damages or any economic consequential damages (including the loss of profits).

IMPORTANT

Before operating or maintaining this unit, please read this manual carefully, paying extra attention to the safety warnings and precautions.

For Services and Support:

Web: www.autelenergy.com

Tel: +49(0)89 540 299608

Email: evsupport.eu@autel.com

For technical assistance in all other markets, please contact your local selling agent.

CONTENTS

1 USING THIS MANUAL 1

1.1 CONVENTIONS 1

2 SAFETY 2

2.1 SAFETY MESSAGES 2

2.2 SAFETY INSTRUCTIONS 2

2.3 DISPOSAL INSTRUCTIONS 3

3 GENERAL INTRODUCTION 4

3.1 PRODUCT OVERVIEW 5

3.2 SPECIFICATIONS 7

4 INSTALLATION 10

4.1 BEFORE YOU BEGIN 10

4.2 INSTALLING THE MAXICHARGER 13

4.3 COMPLETING THE INSTALLATION 20

4.4 PROTECTIVE DEVICE 21

5 OPERATION 22

5.1 POWERING MAXICHARGER 22

5.2 START CHARGING 22

5.3 STOP CHARGING 22

6 TROUBLESHOOTING AND SERVICE 23

6.1 TROUBLESHOOTING TABLE 23

6.2 SERVICE 24

7 COMPLIANCE 25

8 APPENDIX 26

8.1 FAULT CODE LIST 26

1 Using This Manual

This manual describes the installation and operation of the MaxiCharger AC Compact. Prior to installation and operation, read through this manual and familiarize yourself with the instructions of this charger to ensure a successful installation and smooth operations.

1.1 Conventions

The following conventions are used:

1.1.1 Bold Text

Bold text is used to highlight selectable items such as buttons and menu options.

1.1.2 Notes and Important Messages

Notes

A **NOTE** provides helpful information such as additional explanations, tips, and comments.

Important

IMPORTANT indicates a situation that, if not avoided, may result in damage to the test equipment or vehicle.

1.1.3 Illustrations

Illustrations used in this manual are only examples; the actual product(s) or screens may vary.

1.1.4 Revision History

Version	Date	Descriptions
V1	2023.03.01	Initial version
V1.1	2023.07.06	Section 4.1.1 updated Step 1 in the Section 4.2 updated “Connect the Wires” in the Section 4.2.1 updated Step 1 and 2 in the Section 4.3 updated
V1.2	2023.10.13	Section 3.1 updated Section 4.2.2 updated
V1.3	2024.02.18	Section 4.4 added
V1.4	2024.03.08	Section 2.2 updated

2 Safety

For your own safety and the safety of others, and to prevent damage to the device and vehicles upon which it is used, it is important that the safety instructions presented throughout this manual be read and understood by all persons operating or coming into contact with the device.

2.1 Safety Messages

Safety messages are provided to help prevent personal injury and equipment damage. All safety messages are introduced by a single word indicating the hazard level.

DANGER

Indicates an imminently hazardous situation with a high risk level which, if the danger is not avoided, will cause death or serious injury.

WARNING

Indicates a potentially hazardous situation with moderate risk level which, if the warning is not obeyed, can cause death or serious injury.

CAUTION

Indicates a potentially hazardous situation with a medium risk level which, if the caution is not obeyed, may cause minor or moderate injury or damage to the equipment.

2.2 Safety Instructions

The safety messages herein cover situations Autel is aware of. Autel cannot know, evaluate or advise you as to all of the possible hazards. You must be certain that any condition or service procedure encountered does not jeopardize your personal safety.

SAFETY WARNINGS

- Read and follow all warnings and instructions before installing and operating the charger.
- Adaptors or conversion adapters are not allowed to be used. Cord extension sets are not allowed to be used.
- This equipment should only be installed by a licensed electrician in accordance with all local codes and ordinances.
- This equipment must be grounded through a permanent wiring system or an equipment-grounding conductor.
- Do not install or use this equipment near flammable, explosive, harsh, or combustible materials, chemicals or vapors.
- Children should be supervised when around this equipment.
- Do not insert fingers or foreign objects into the electric vehicle connector.

- Do not use the equipment if the flexible power cord or EV cable is frayed, broken or otherwise damaged, or fails to operate.
- Use copper conductors only.
- Do not operate the equipment outside its operating temperature range of -30 to 50 °C.
- Incorrect installation and testing of the equipment could potentially damage the vehicle's battery, components, and/or the equipment itself.
- Handle the equipment with care during transportation. Do not subject it to strong force or impact or pull, twist, tangle, drag or step on the equipment, to prevent damage to it or any components.
- Neutral must be bonded to Ground upstream at the transformer or panel for each separately derived system.
- The use of the MaxiCharger may affect the operation of any medical or implantable electronic devices, such as implantable cardiac pacemaker or implantable cardioverter defibrillator. Check with your electronic device manufacturer concerning the effects that charging may have on such electronic devices before using the MaxiCharger.
- **If any specifications or regulations mentioned in this manual contradict with your local rules, refer to your local rules.**

2.3 Disposal Instructions

Handling waste incorrectly can have a negative effect on the environment and human health due to potential hazardous substances. Discard the charging station correctly can facilitate the reuse and recycling the materials and environmental protection.

- Obey the local rules when discarding parts, packaging materials or the charging station.
- Discard electrical and electronic equipment separately in compliance with the WEEE-2012/19/EU Directive on waste of electrical and electronic equipment.
- Do not mix or dispose the charging station with the household waste.

3 General Introduction

The MaxiCharger AC Compact is designed to charge electric vehicles (hereinafter called EVs) in a residential environment. Our chargers provide safe, reliable, fast, and smart charging solutions.

This manual will instruct you how to install and use this charger.

Intended Use

The MaxiCharger AC Compact is intended for the AC charging of EVs. It is intended for both indoor and outdoor use.

DANGER

1. Do not operate the equipment in any way other than as described in this manual or other related documents. Not following the instructions may cause potential personal injury and/or damage to the property.
2. Use the equipment only as intended.

NOTE

The images and illustrations depicted in this manual may differ slightly from the actual product.

3.1 Product Overview

1. LED Indicators (from left to right):
   - Power LED
   - Internet Connection LED
   - Charging LED
   - Bluetooth Connection LED
2. RFID Card Reader
3. Socket
4. Product Label
5. Terminal Block
6. Built-in Spirit Level
7. Back Entry Location for AC Input Cable
8. Back Entry Location for Ethernet and/or RS485 Cable
9. Top Entry
10. Bottom Entry
11. 4G Function (optional)

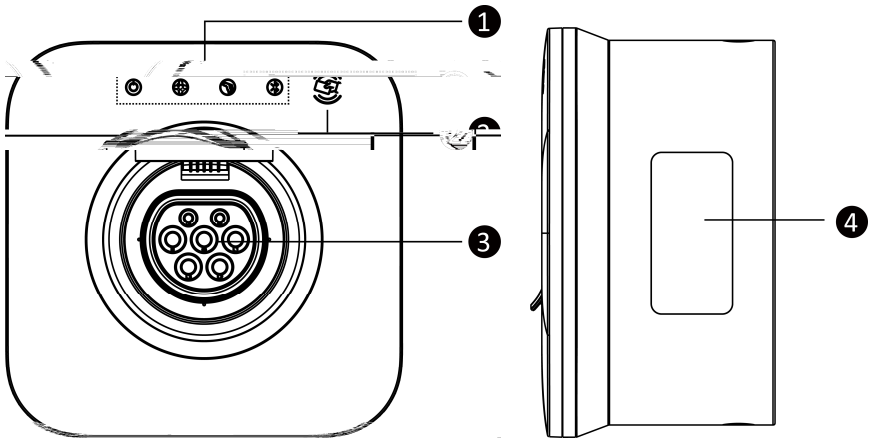

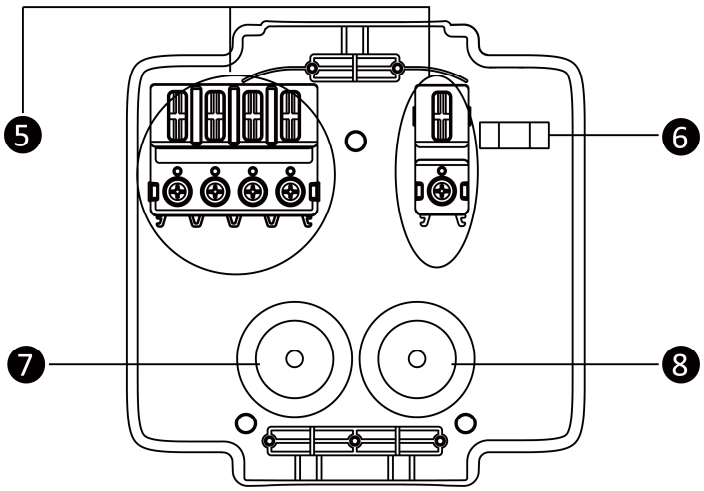

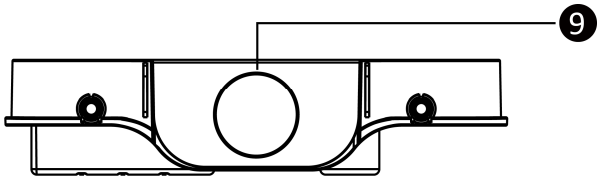

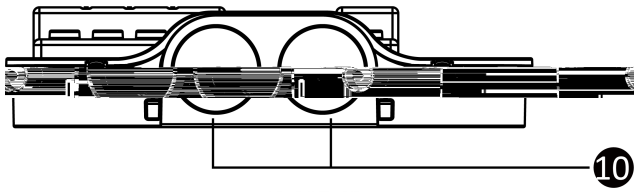

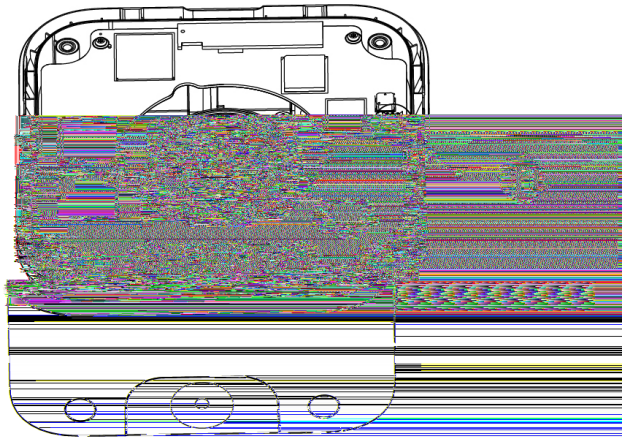

LED Description

LED	Description
Power LED	● **Solid Green:** The charger is on. ● **Not Illuminated:** The charger is off. ● **Flashing Yellow:** Data are being transmitted and/or firmware is upgrading. ● **Solid Yellow:** Firmware upgrade has failed. ● **Solid Blue:** Data transmission has failed; will illuminate green in five seconds.
Internet Connection LED	● **Solid Green:** The charger is connected to the Internet. ● **Not Illuminated:** The charger is not connected to the Internet. ● **Flashing Green:** The charger has joined the DLB (Dynamic Load Balancing) network.
Charging LED	● **Solid Blue:** An EV is connected. ● **Flashing Blue:** A schedule is active. ● **Flashing Green:** An EV is charging. ● **Solid Green:** A charging session has ended. ● **Not Illuminated:** The charger is not connected. ● **Solid Yellow:** A recoverable error has occurred or is temporarily disabled by the server. ● **Solid Red:** An irrecoverable error has occurred (please contact support).
Bluetooth Connection LED	● **Flashing Green:** The charger is connected to a mobile device via Bluetooth. ● **Not Illuminated:** The charger is not connected via Bluetooth.

3.2 Specifications

3.2.1 Technical Specifications

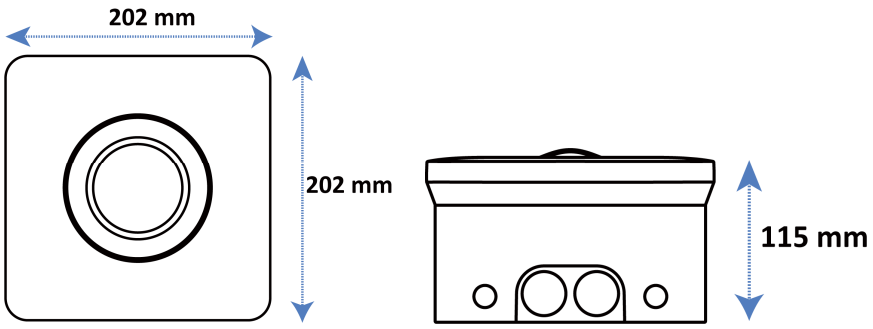

AC Power Output Rating	Maximum 7 kW/22 kW
Output Current	Maximum 32 A
AC Power Input Rating	● 230 V AC, 50 Hz, single-phase ● 400 V AC, 50 Hz, three-phase
Input Wiring Scheme	● 3 wires ● 4 wires ● 5 wires
Connector Type	IEC 62196 type 2 normal socket
Display	4 LEDs
Metering	Meter IC, ± 2%
Ground Fault Detection	AC 30 mA + DC 6 mA
Protection	● Overcurrent ● Overvoltage ● Undervoltage ● Integrated surge protection

Connectivity	• Bluetooth (Frequency: 2.4 G; Transmit power: 6 dBm) • Wi-Fi (Frequency: 2.4 G; Transmit power: 18.5 dBm) • RFID (Frequency: 13.56 MHz; Transmit power: 10 dBuA/m @3 m) • Ethernet (Available on some models) • RS485 (Available on some models)
Communications Protocols	OCPP 1.6J
Mounting	Wall-mounted or floor using a pedestal
Enclosure Ratings	• IP54 • IK10
Operating Temperature	-30 to 50 °C
Storage Temperature	-40 to 70 °C
Safety and Compliance	• IEC/EN 61851-1 • EN 50663 • EN 50665 • IEC/EN 62955
Codes and Standards	CE (TUV)
Warranty	3 years
Active Load Management	Yes
Dimensions (H x W x D)	202 x 202 x 115 mm

3.2.2 Cable Specifications

Cable Type	Specification
AC Input Cable (Single-phase, 32 A)	Cross section: 3 x 6–10 mm^2
AC Input Cable (Three-phase, 32 A)	Cross section: TN/TT: 5 x 6–10 mm^2 IT: 4 x 6–10 mm^2
RS485 Cable	Cross section: 2 x 0.2–1.5 mm^2

4 Installation

4.1 Before You Begin

4.1.1 Checking the Box

Ensure all the items below can be found in the packing box. Some items are packed inside the wirebox.

Main Unit (x 1)		**Wirebox** (x 1)	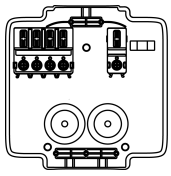
Self-tapping Screw (Φ5 x 40) (x 3)		**Screw (M5 x 10)** (x 3)	
Wall Anchor (Φ8 x 40) (x 3)		**Self-tapping Screw (Φ3 x 10)** (x 4)	
Screw Plug (x 4)		**Sealing Plug** (x 2)	
Blind Sealing Plug (x 3)		**Strain Relief** (x 2) **(Single-phase wiring only)** Suggested wire size: Φ15–19 mm	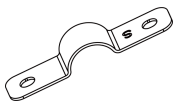
Strain Relief (x 2) **(Three-phase wiring only)** Suggested wire size: Φ19–24 mm		**Screwdriver (Type T25)** (x 1)	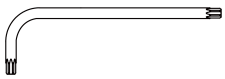
Charge Card (x 2)			

4.1.2 Preparing Installation Tools

You may need the following tools during installation:

Scissors		**Power Drill**	
Drill Bit (8 mm)		**Step Bit (30 mm)**	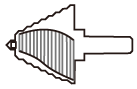
Phillips Bit (PH2)	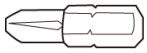	**Marker**	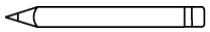
Tape Measure	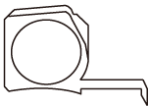	**Wire Stripper**	
Torque Driver (2 N·m)		**Multimeter**	
Flathead Screwdriver			

NOTE

The tools listed above are excluded from the package.

4.1.3 Location Requirements

- Install your charger on a flat and vertical surface capable of supporting its weight (e.g., a finished wall or pedestal).
- Position the charger in a location where it is not vulnerable to being damaged.
- Allow the charging cable to sufficiently reach the vehicle’s charging port without any strain.

4.1.4 Cable Entry Options

The MaxiCharger AC Compact supports three cable entry options for AC input cables and Ethernet and/or RS485 cable: **from the top**, **from the bottom**, and **from the back**.

Depending on AC input cable entry, the Ethernet and/or RS485 cable entry will vary accordingly. The cable entry options are as follows:

Cable Entry Options	**A — AC Input Cable** **B — Ethernet and/or RS485 Cable**
1	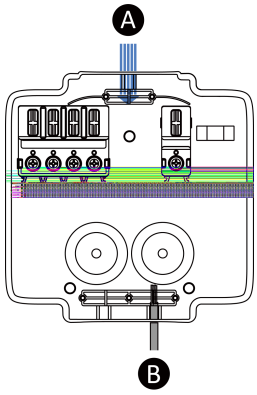
2	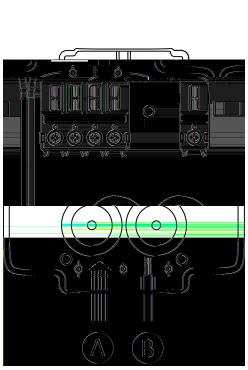 **OR** 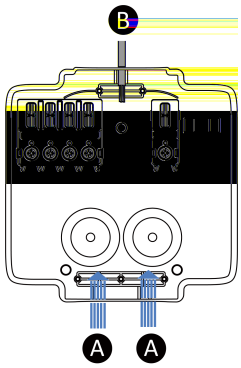 **NOTE**: For parallel connection application, adjacent chargers can be connected using the two bottom entries for AC input cables. The Ethernet and/or RS485 cable can be engaged from the top entry.
3	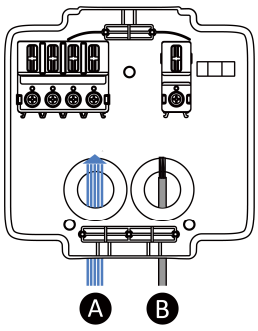 **NOTE**: Drill the two holes measuring 30 mm in diameter at the designated locations and route cables into the wirebox before installing the wirebox.

4.2 Installing the MaxiCharger

Step 1

Place the MaxiCharger face down on a table. Hold the main unit (**A**) and pull up on the strap to release the wirebox (**B**).

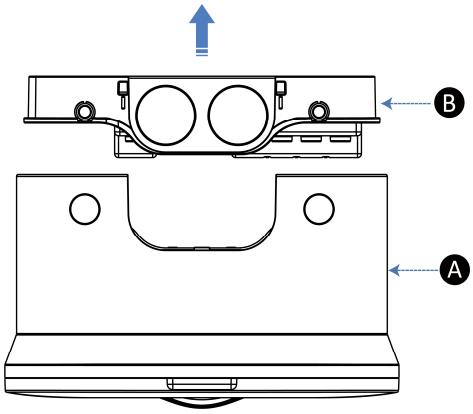

Step 2 (Back Entry Only)

1. Use the power drill with a 30 mm step bit to drill two holes at the designated locations.

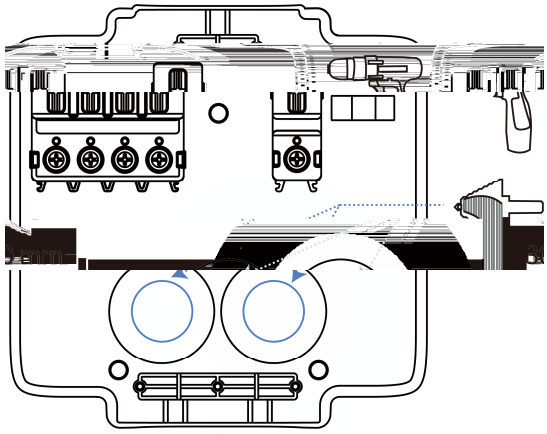

2. Use a pair of scissors to cut two sealing plugs (**A**) to fit the AC input cable and Ethernet cable. Make the holes smaller than the cables to ensure a good fit.

NOTE

See **Step 4** on **Page 15** for reference to cut the sealing plugs.

3. Route the cables into the wirebox from the back.

4. Push the sealing plugs (**A**) to cling to the entries.

5. Use three blind sealing plugs (**B**) to seal the spare entry.

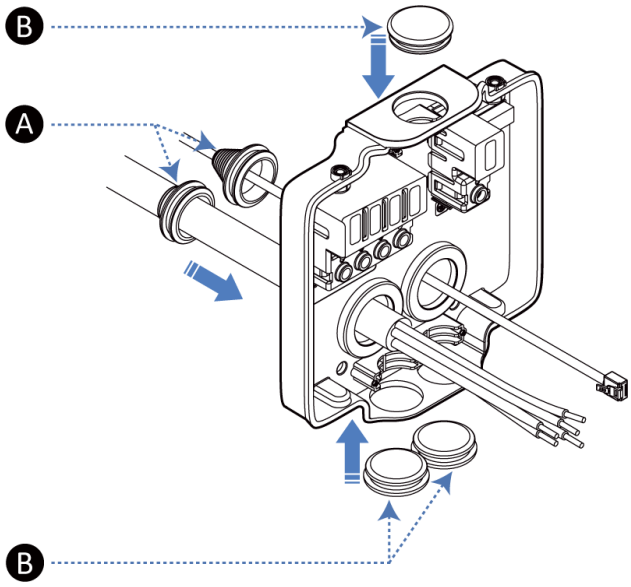

Step 3

1. Place the wirebox against the wall with an appropriate height and level it using the built-in spirit level (**A**).

   Recommended height: 850–1150 mm

   For ADA Accessibility: 700–800 mm

2. Make three marks at the designated location. Remove the wirebox temporarily.

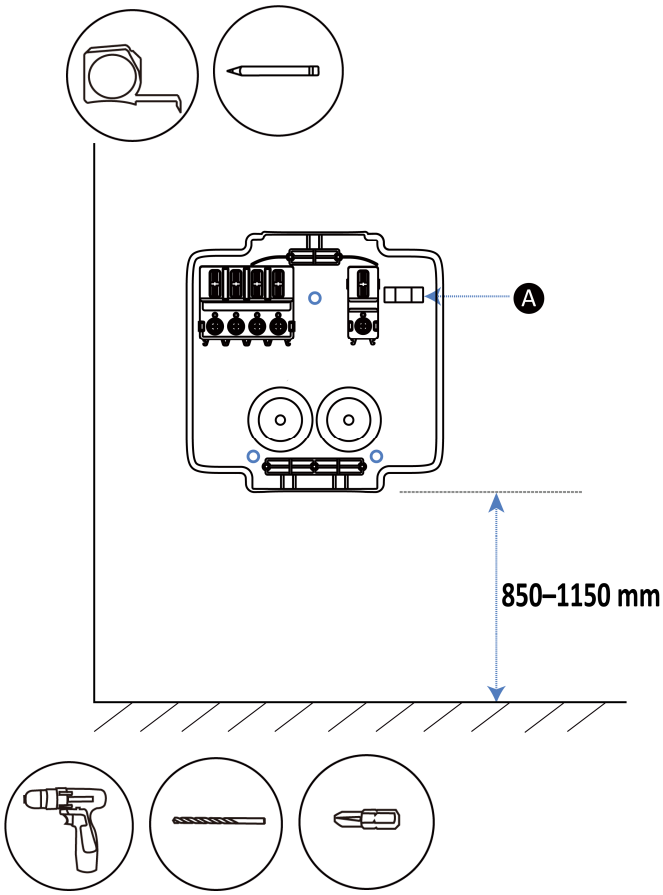

3. Drill three holes at the marked locations, measuring 8 mm in diameter and 50 mm in depth.

4. Tap the three wall anchors (**A**) into the drilled holes.

5. Attach the wirebox to the wall using the three Φ5 x 40 self-tapping screws (**B**). Use the power drill with a Phillips bit (PH2) to tighten the screws.

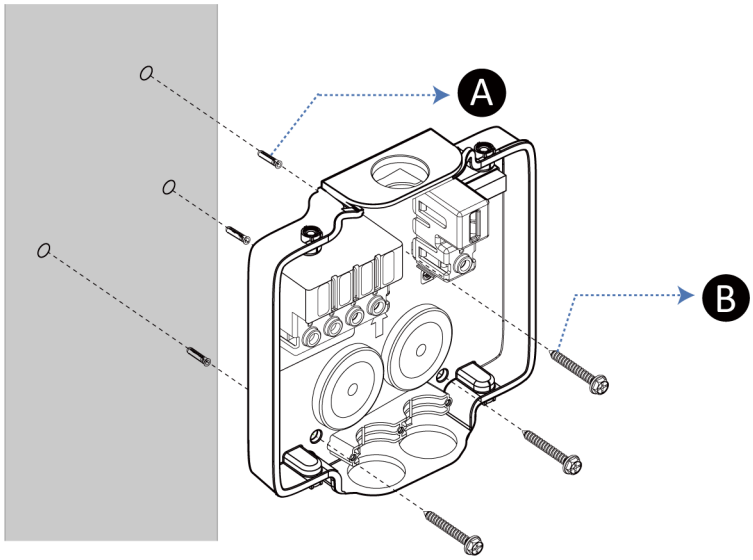

Step 4

Use a pair of scissors to cut two sealing plugs referring to the diagrams to fit the AC input cable and Ethernet cable. Make the holes smaller than the cables to ensure a good fit.

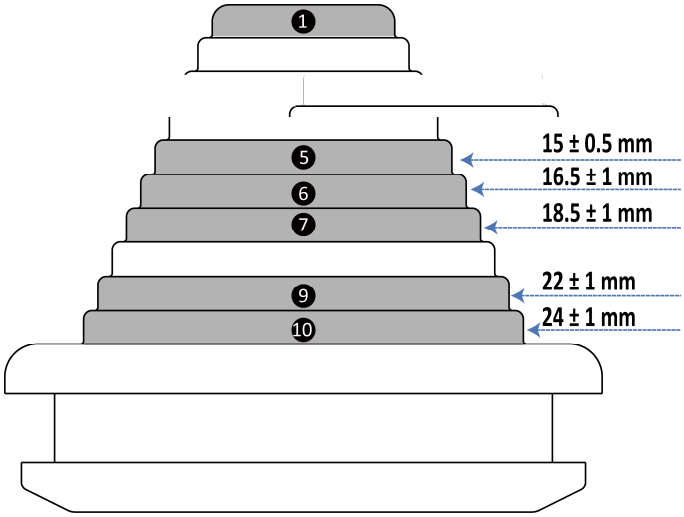

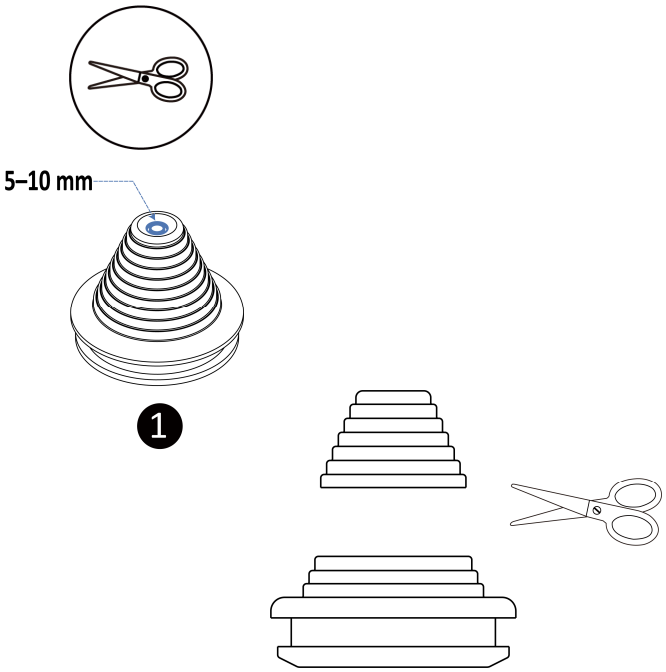

Option 1 (AC Input Cable — Top; Ethernet Cable — Bottom)

1. Route the AC input cable into the wirebox from the top.
2. Route the Ethernet cable into the wirebox from the bottom.
3. Push the sealing plugs (**A**) to cling to the entries.
4. Install a strain relief (**B**) by inserting the two Φ3 x 10 mm self-tapping screws (**C**). Use the torque driver with a Phillips bit (PH2) to tighten the screws. The torque is 0.7 Nm.
5. Use one blind sealing plug (**D**) to seal the spare entry.

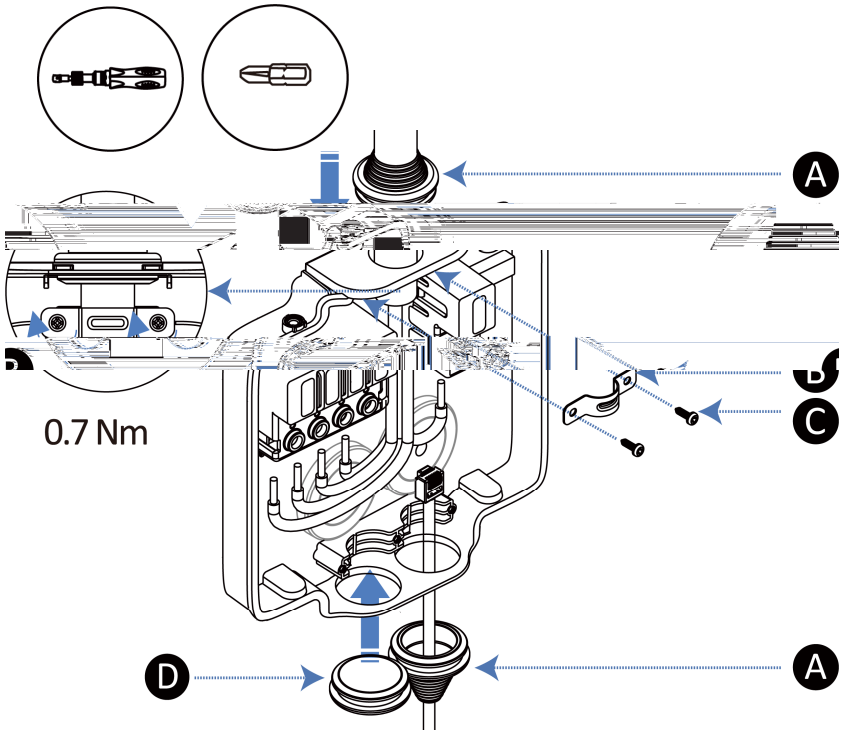



Single-phase

Suggested wire size: Φ15–19 mm

Three-phase

Suggested wire size: Φ19–24 mm

Option 2 (AC Input Cable — Bottom; Ethernet Cable — Bottom)

1. Route the AC input cable and the Ethernet cable into the wirebox from the bottom.
2. Push the sealing plugs (**A**) to cling to the entries.
3. Install a strain relief (**B**) by inserting the two Φ3 x 10 mm self-tapping screws (**C**). Use the torque driver with a Phillips bit (PH2) to tighten the screws. The torque is 0.7 Nm.
4. Use one blind sealing plug (**D**) to seal the spare entry.

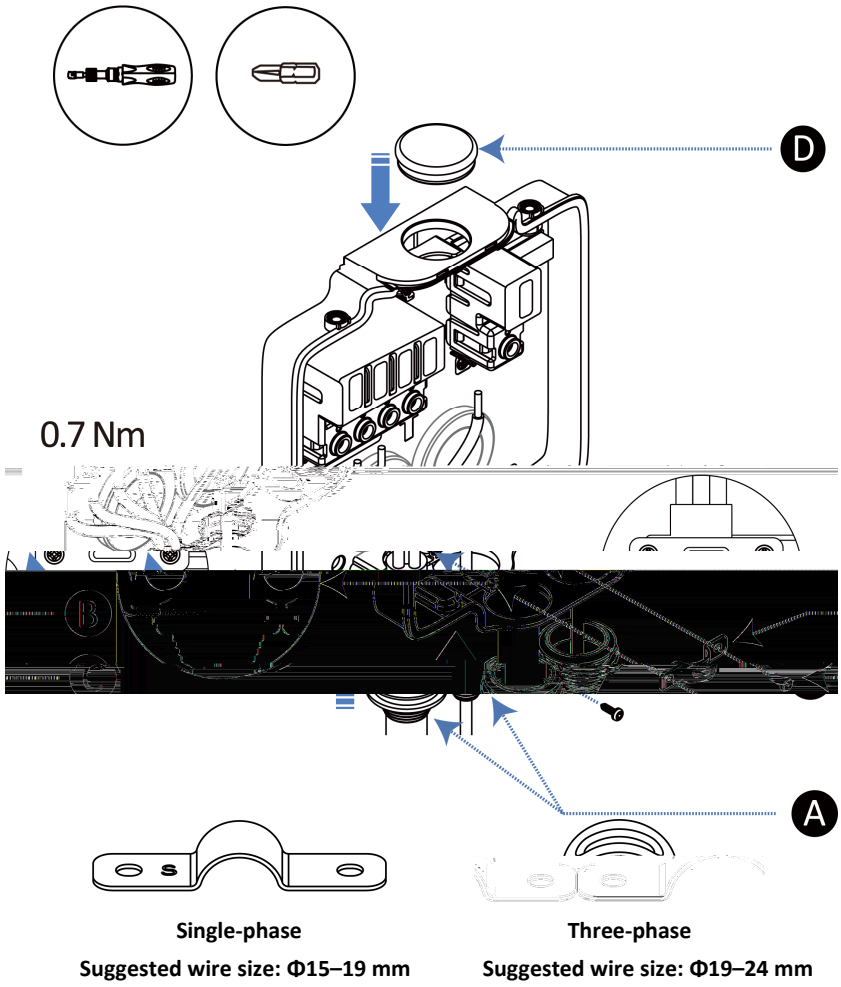

Single-phase

Suggested wire size: Φ15–19 mm

Three-phase

Suggested wire size: Φ19–24 mm

Parallel Connection Application

If you have more than one charger, the AC input cables should be routed into the wirebox from the bottom entries. Each terminal port can be used as a connection point to the adjacent charger on the same circuit, thus realizing parallel connection.

4.2.1 AC Input Wiring

The MaxiCharger supports single-phase and three-phase wiring. Please connect the wires depending on your order.

Connect the Wires

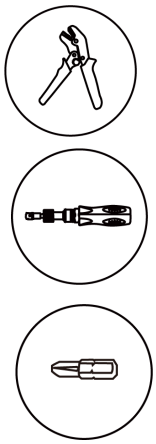

1. Strip the wires by 13 mm.
2. Insert the exposed core into the corresponding terminal port.
3. Use a torque driver with a Phillips bit (PH2) to tighten the screws to 2 Nm.

Single-phase Wiring

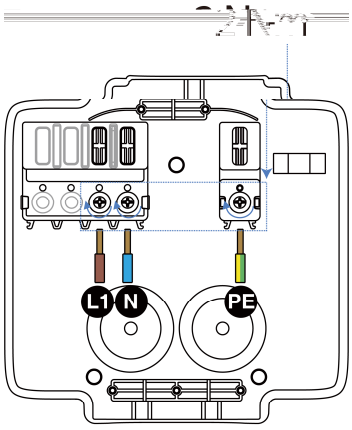

TN/TT

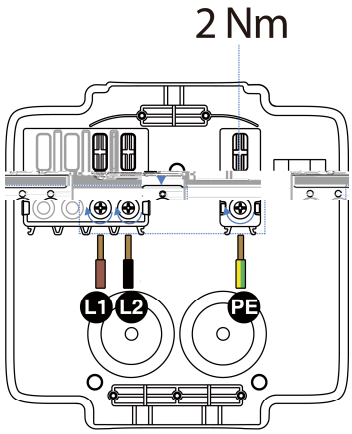

IT

Three-phase Wiring

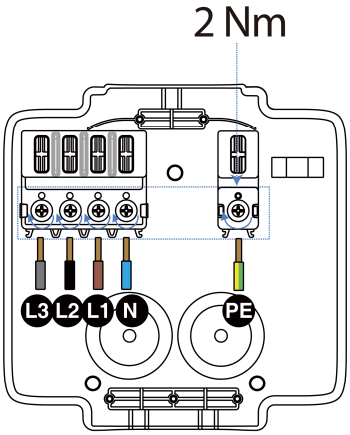

TN/TT

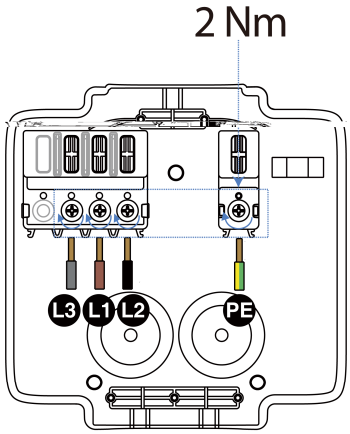

IT

4.2.2 Connecting to the Internet

The MaxiCharger can access the Internet via Ethernet Cable or cellular network. Select the optimal method to connect the Internet and follow the steps below accordingly.

Option 1: Via the Ethernet Cable

Connect the Ethernet cable to the port inside the main unit.

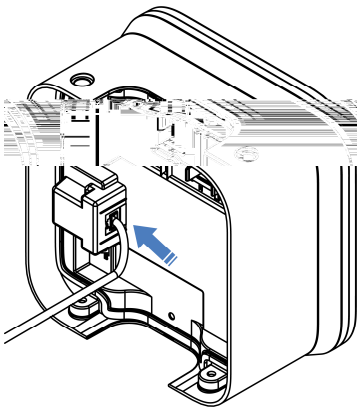

Option 2: Via the Cellular Network

1. Remove the faceplate from the middle of the clasp (A).

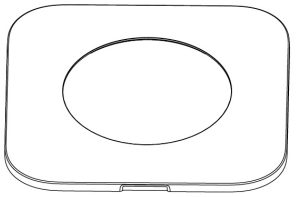

2. Unscrew the four screws using the T25 screwdriver and remove the middle cover.

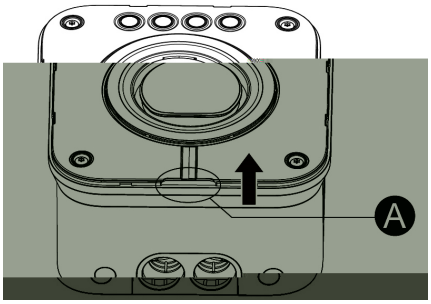

3. Push the SIM card cover (B) in the direction indicated by the arrow and flip it up.

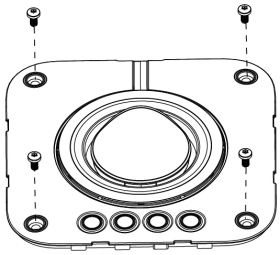

4. Insert the SIM card into the SIM card tray. Ensure the card is placed correctly.



5. Reinstall the SIM card cover, middle cover, and faceplate.

4.2.3 Connecting the RS485 Cable

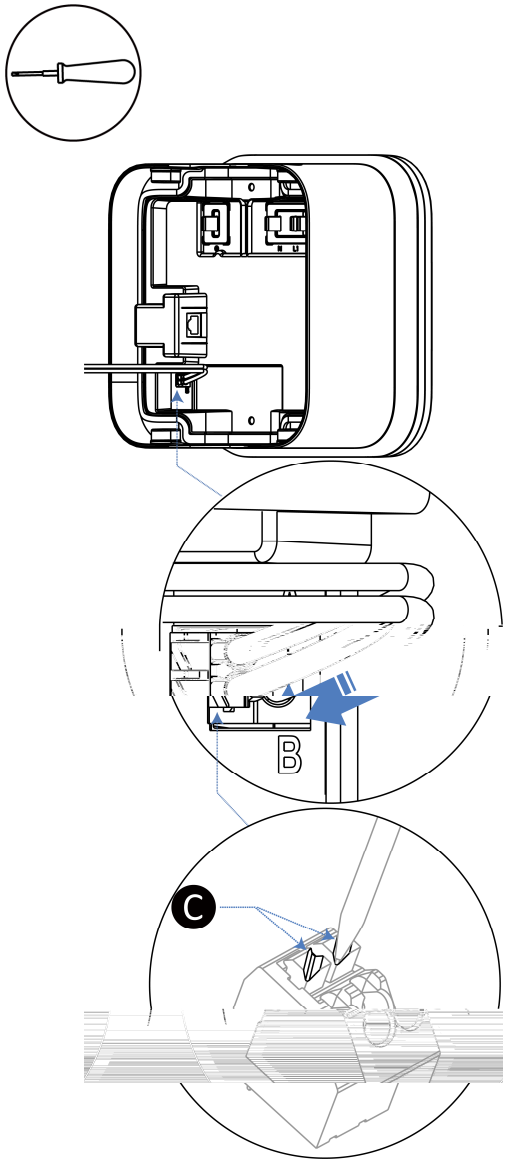

If RS485 communications is needed, the RS485 cable can be routed into the wirebox from the same Ethernet cable entry.

1. Use a flathead screwdriver to press and hold the buttons **(C)** below the RJ45 port to release the ports.

2. Connect the RS485-A wire to the port marked “A” and the RS485-B wire to the port marked “B”.

4.3 Completing the Installation

1. Attach the main unit onto the wirebox by pushing it forcefully to tightly fit the wirebox. Ensure the internal seal is compressed.

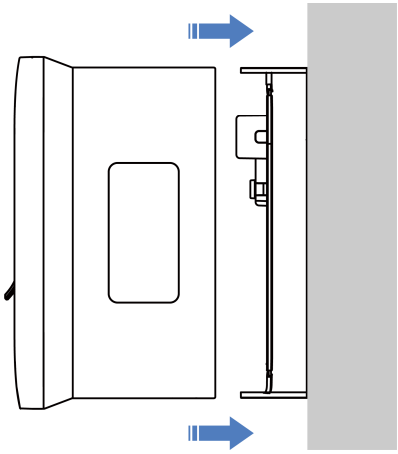

2. Insert the four M5 x 10 screws and fully tighten them using the T25 screwdriver.

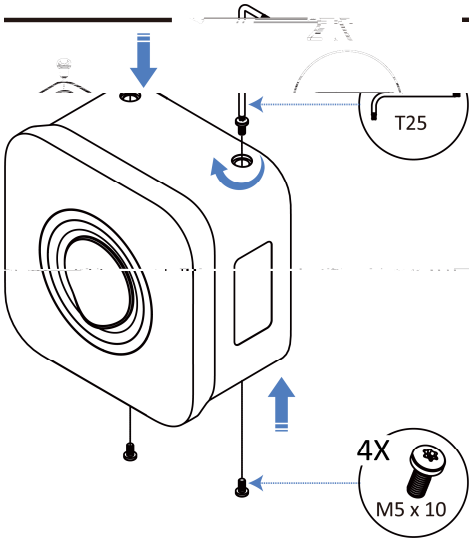

3. Install the four screw plugs provided in the package. Ensure the contact pins fit the contacts in the main unit. The installation is completed now.

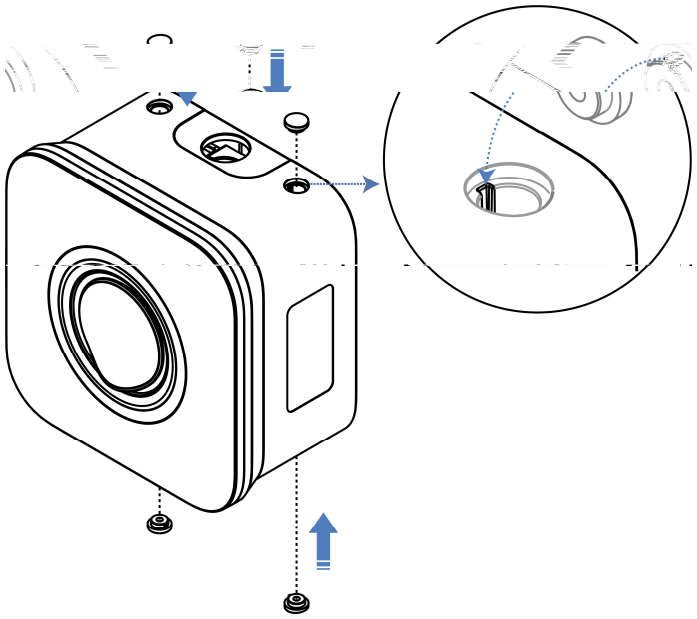

4.4 Protective Device

Devices	Specifications
Dedicated upstream protection device(s)	Options: RCD (Type A minimum) + MCB RCBO (Type A minimum)
Upstream overcurrent protection breaker, such as RCBO or MCB. (The breaker serves as the main disconnect switch to the charging station.)	Breaker rating: 40 A for a 32 A rated charging station Tripping characteristics: type C
Upstream residual-current device (RCD)	Minimum Type A, with a rated residual operation current of maximum 30 mA (Internal to charging station is DC fault current monitoring > 6 mA.)

NOTE

The breaker value depends on the diameter and length of the cable, charging station rating, and the environmental parameters (for the electrician to decide).

The MaxiCharger AC Compact has the internal 30 mA AC and 6 mA DC residual current detection.

In some countries, local standards may require external protection devices. Check the local standards accordingly. External RCD + MCB or RCBO are also recommended as below:

- 7.4 kW: 30 mA Type A RCBO 230 V/40 A
- 22 kW: 30 mA Type A RCBO 400 V/40 A

For EV Ready requirement:

The circuit breaker must be curve C, 40 A and a short-circuit current limited to 6000 A to be sure of having a limitation of 75000 A^2/s for case B and 80000 A^2/s for case C. For the RCD part: meter 30 mA.

Otherwise, comply with local regulations.

5 Operation

5.1 Powering MaxiCharger

Ensure all the installation and wiring are secured and correct, then power on the charger. There will be a series of self-check starts, making sure that the charger works correctly and safely. The power LED should illuminate green. If a recoverable error is detected or the charger is temporarily disabled by the server, the charging LED will illuminate yellow; if the error cannot be recovered, it will illuminate red.

WARNING

Be careful when you work with electricity.

5.2 Start Charging

1. Insert the charging handle into the charge port on your EV and the charger socket outlet.
2. Choose one of the following ways to start a charging session:
   - Tap your RFID card on the RFID card reader.
   - Use the Autel Charge app by tapping **Start** on the Charge screen.
   - If you have set a charging schedule in the Autel Charge app, the charger will initiate a charging session automatically as scheduled. (Scheduled charging case)
   - If the Plug-and-charge function is enabled in the Autel Charger app, the charger will automatically start charging once the charging handle is properly connected.

NOTE

Ensure your EV is charging. The charging LED on the charger should flash green. If you suspect the vehicle is not charging properly, try reconnecting the charging cable or contact customer support for further assistance.

5.3 Stop Charging

1. To stop charging, you can choose either of the following two ways:
   - Wait for the charging session to end and no further actions are required in the case of scheduled charging or plug-and-charge.
     - The charging LED will illuminate solid green.
     - The Autel Charge app displays that your EV is fully charged.
   - End the charging session via the Autel Charge app or by tapping your RFID card on the RFID card reader again.
2. Remove the charging handle from the charger socket outlet and the EV charge port.

6 Troubleshooting and Service

6.1 Troubleshooting Table

Item	Problems	Solutions
1	The charger is successfully added, but the Bluetooth connection fails.	Check whether the QR code on the charger is consistent with the QR code in the Quick Reference Guide. If so, make sure that Bluetooth is enabled on your mobile device. If not, contact customer support.
2	The charging session does not start as scheduled.	Do not insert the connector into your EV charging port before setting up a charging schedule first. Insert the EV charging cable after the schedule is set.
3	Over-voltage	Use the multimeter to check whether the voltage on the power input is too high. If the result is greater than or equal to 115% of the rated voltage (263 V), contact your local power grid company.
4	Under-voltage	Use the multimeter to check whether the voltage on the power input is not sufficient. If the result is less than or equal to 70% of the rated voltage (161 V), contact your local power grid company.
5	Ground fault	Make sure the charger is properly grounded.
6	Power failure	Make sure the switch to the circuit breaker is on.
7	Over-heating	● Check whether the EV charging cable is securely connected. ● Ensure the operating temperature is within the specified range on the product label. ● Stop charging. Restart charging until it is within the operation temperature range.
8	Residual current detected	Unplug the vehicle and plug in again. If the problem persists, contact customer support.

Item	Problems	Solutions
9	Bluetooth communication failure	● Make sure the Bluetooth is enabled on your mobile device and the charger is powered on and operating properly. ● Forget the charger in the Bluetooth settings on your mobile device and pair the charger to your device via Bluetooth again. ● If the problem persists, contact customer support.
10	Update failure via Bluetooth	● Make sure the charger is in idle status. ● Make sure the Bluetooth connection is working properly. ● If the problem persists, contact customer support.
11	Internet connection fails	● Try to connect another device to the same Internet, verifying the Internet connection is working properly. ● If the problem persists, contact customer support.

6.2 Service

If you cannot find solutions to your problems with the aid from the table above, please contact our technical support.

AUTEL

- **Website:** www.autelenergy.com; www.autelenergy.eu
- **Phone:** +49 (0) 89 540299608 (Monday-Friday, 9:00AM-6:00PM Berlin Time)
- **Email:** evsupport.eu@autel.com
- **Address***:* Landsberger Str. 408, 4. OG, 81241 Munich, Germany

7 Compliance

The product is in conformity with the following standards and/or other normative documents:

EN 301 489-1 V2.2.3

EN 301 489-3 V2.1.1

EN 301 489-17 V3.2.4

EN 301 489-52 V2.1.1

EN 300 328 V2.2.2

EN 300 330 V2.1.1

EN 301 908-1 V13.1.1

EN 301 908-2 V13.1.1

EN 301 908 -13 V13.1.1

EN 301 511 V12.5.1

EN 50663

EN 50665

BS EN IEC 61851-1

EN IEC 61851-1

IEC 61851-21-2

EN IEC 61851-21-2

8 Appendix

8.1 Fault Code List

The table below contains the fault codes on the Autel Charge Cloud and their descriptions on the Autel Charge app.

Fault Codes	Descriptions
01	Mains overvoltage
02	Mains undervoltage
04	Mains over-frequency
08	Mains under-frequency
10	Phase loss
20	Line/Neutral reverse connection
40	Ground fault
80	Abnormal shutdown
100	Over-temperature
200	Leakage current
400	CP voltage abnormal/grounded
800	Contactor abnormal
1000	Output overcurrent
2000	Vehicle S2 failure
4000	Vehicle CP negative failure
8000	PP signal disconnected
10000	PP signal abnormal
20000	Electronic lock fault
40000	PME fault
80000	PME failed to disconnect relay
100000	COMM error with control board
200000	Electric meter abnormal
400000	Data error
800000	Leakage current (AC)
1000000	Trip fault
2000000	Sensor self-test fault

Fault Codes	Descriptions
4000000	Output ground fault
8000000	Ground self-test fault
10000000	Microelectronics fault
20000000	Temperature sensor abnormal
40000000	Power System abnormal

AUTEL®

www.autelenergy.com